December 2010

Uniclass L534+L212

concrete kerbs

GUIDE TO THE PROPERTIES, DESIGN, HANDLING, INSTALLATION AND REINSTATEMENT OF PRECAST CONCRETE KERBS

Interpave
THE PRECAST CONCRETE PAVING AND KERB ASSOCIATION

www.paving.org.uk

CONCRETE KERBS

guide to the properties, design, handling, installation and reinstatement of precast concrete kerbs

EDITION 2

(downloaded from http://www.paving.org.uk)

Published by Interpave
The Precast Concrete Paving & Kerb Association
The Old Rectory, Main Street,
Glenfield, Leicester, LE3 8DG

tel: 0116 232 5170
fax: 0116 232 5197
e-mail: info@paving.org.uk
website: www.paving.org.uk

Interpave is a Product Association of the British Precast Concrete Federation Ltd.

© 2010 BPCF Ltd.

Every effort has been made to ensure that the statements made and the opinions expressed in this publication provide a safe and accurate guide; however, no liability or responsibility of any kind (including liability for negligence) can be accepted in this respect by the publishers or the authors.

CONTENTS

SECTION

	PAGE
1 PROPERTIES	2
2 HANDLING	11
3 DETAILING AND INSTALLATION	21
4 REINSTATEMENT	27

Downloaded from http://www.paving.org.uk

1 PROPERTIES

Kerbs channels and edgings have been used to restrain the edges of roads and footways since Roman times and precast concrete kerbs have been in use for some 70 years. This long historical tradition continues today although new types of product are being developed all the time to meet modern needs including vehicle containment kerbs and products to facilitate bus access for all.

Applications

Kerbs and edgings provide edge restraint for all types of external surfaces, including concrete block and flag paving. They mark the differentiation between road and footway, giving a visual warning to pedestrians and vehicles with a change of level. Channels are used to intercept and transport surface water but can also be used for edge restraint. They are very effective where the gradients are relatively shallow or where a level change is not appropriate - for example within the shared surfaces of Home Zones.

Precast concrete kerbs, channels and edgings are used wherever a pavement edge restraint or drainage channel is required, including :

- pedestrian areas
- domestic drives
- public, private & commercial footways
- school playgrounds
- pedestrian/vehicular precincts and driveways
- carriageways
- industrial pavements

Precast concrete kerbs are specifically used in heavily trafficked areas to provide extra strength to the edge of the carriageway. They also:

- prevent vegetation encroaching onto the road
- act as a demarcation line between road and footway
- deter traffic from mounting the footway
- provide a barrier to divert water runoff into the gullies
- prevent the surfacing materials on the road from spreading under load

New forms of kerbs are being developed all the time to meet specific needs. For example, high containment kerbs offer a simple, cost-effective system for passive traffic control, contributing towards better road safety. They protect pedestrians on footways as well as installations such as pedestrian refuges, petrol pump islands, lamp-posts, signage and toll booths. The scale and profile of the kerb provides a real visual warning to the driver as well as a two-stage physical deterrent to over-riding by vehicles.

Downloaded from **http://www.paving.org.uk**

The 'ramped toe' and concave recess above, which contains the bulge of the tyre, prevent vehicle wheels from climbing the kerb, so the vehicle is redirected along a safe line dictated by the kerb. These high containment kerbs are easily visible to the driver, clearly denoting the edge of the route and warning drivers to take evasive action.

Other products have been developed to facilitate access by wheelchair users, people with prams, the disabled and others onto buses. Here, special kerbs overcome the problems associated with height variance between pedestrian pavement and the various entrance levels of public transport vehicles, while minimising the gap between resulting from easier, accurate vehicle positioning. Full details of special products can be obtained from individual Interpave manufacturer Members

Colours, Shapes & Textures

Precast concrete kerbs are produced in a wide range of sizes and radii with coloured, textured and profiled surfaces. They are manufactured using three main processes : semi - dry, wet pressed and wet cast, although the majority are produced by hydraulic pressing, with some very specialist kerb components wet cast. Secondary processes provide a wide range of colours and surface finishes, some of which provide a close match to traditional stone. These are particularly useful for the cost-effective edging to roads and footways in historic towns and conservation areas. Full details of special products and finishes can be obtained from individual Interpave manufacturer Members.

Downloaded from **http://www.paving.org.uk**

Sizes and Shapes

Comprehensive and extensive ranges of kerbs, channels and edgings are manufactured in accordance with the British Standard BS EN 1340 which covers the production of commercial units. The following table is taken from the National Annex of BS EN 1340.

Types of product and their designations

Type	Designation	Reference
Kerbs		
Bullnosed kerb	BN	Figure NA.1a)
45~ splayed kerb	SP	Figure NA.1 b)
Half battered kerb	HB1	Figure NA.1c)
	HB2	NA. 1d)
	HB3	NA. 1e)
Transition kerb (left hand)	TL	Figure NA.2a)
Transition kerb (right hand)	TR	Figure NA.2a)
Dropper kerb (left hand)	DL	Figure NA.2b) NA.2c)
Dropper kerb (right hand)	DR	Figure NA.2b) NA.2c)
Channels		
Channel square	CS1	Figure NA.1f)
	CS2	NA. 1g)
Channel dished	CD	Figure NA. 1h)
Edgings		
Round top edging	ER	Figure NA.3a)
Flat top edging	EF	Figure NA.3b)
Bullnosed edging	EBN	Figure NA.3c)
Quadrants		
Bullnosed quadrant	QBN	Figure NA.3d)
45~ splayed quadrant	QSP	Figure NA.3d)
Half battered quadrant	QHB	Figure NA.3d)
Angles		
Internal angle	IA	Figure NA.3e)
External	XA	Figure Na.3f)

Kerbs and channels are available in a range of internal and external radii. To conform with BS EN 1340, radius kerbs and channels should be used on curves of 15 m radius or less. Preferred radii of kerbs are 0,5; 1; 2; 3; 4; 5; 6; 8; 10 and 15 m with a recommended length of 780 mm. Other radii kerbs are available: contact Interpave member companies for further information.

Downloaded from **http://www.paving.org.uk**

Profiles and Applications

As a guide, the following standard kerb profiles are used for the purposes shown below.

* Half battered - to deflect/redirect traffic back onto the carriageway
* Splay - allows vehicles to mount onto the verge

The National Annex of BS EN 1340 shows the kerb sections normally used in the UK, as illustrated below.

standard kerb cross-sections

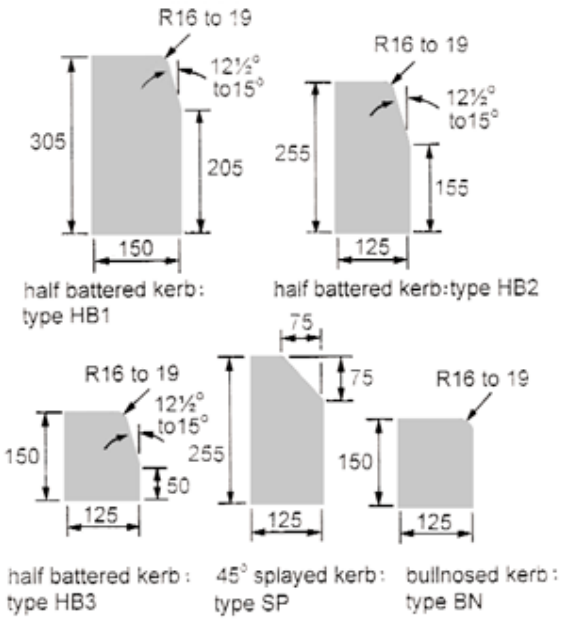

drop kerb dimensions

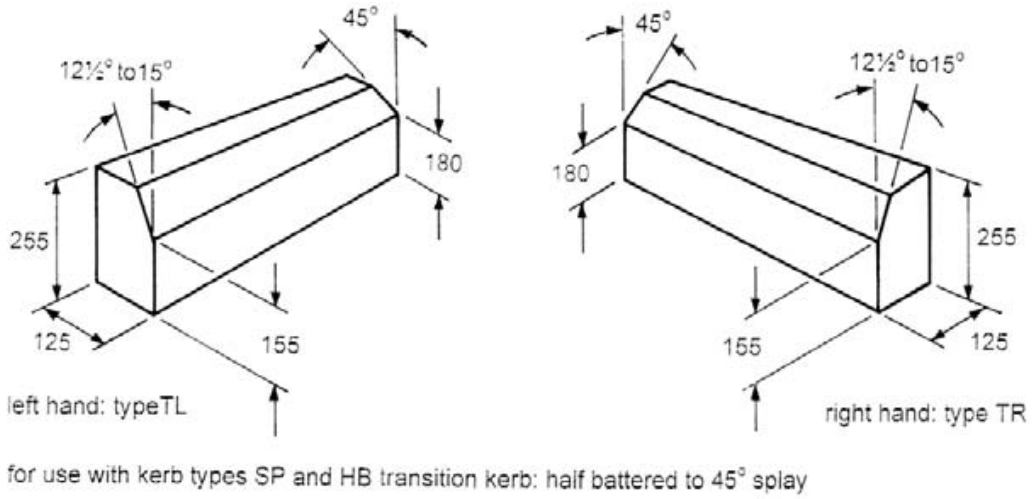

Downloaded from **http://www.paving.org.uk**

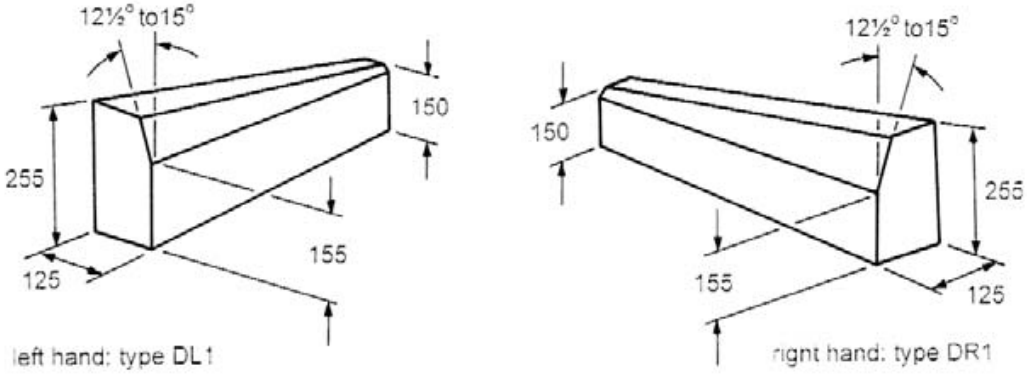

for use with kerb types DN and HB drop kerb Type 1: half battered to bullnose

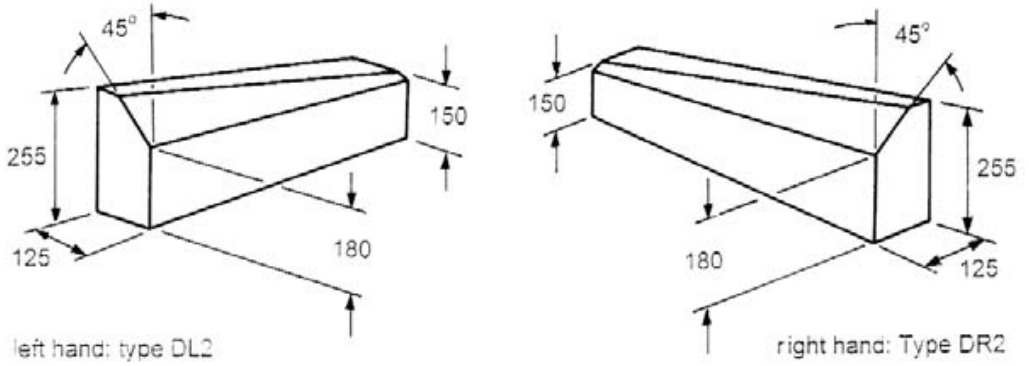

for use with kerb types DN and HB (1) drop kerb Type 2: 45° splayed to bullnosed

radius kerb and channel dimensions

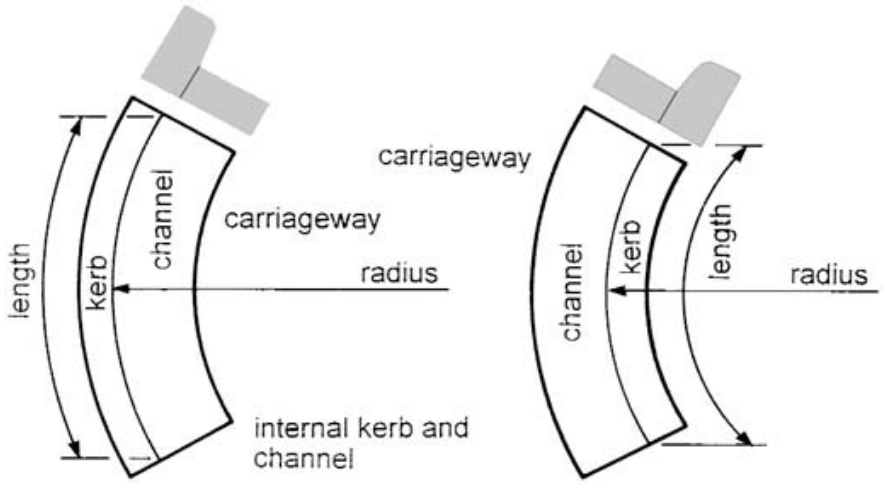

nomenclature and length of radius kerbs and channels

Downloaded from http://www.paving.org.uk

channel cross-sections

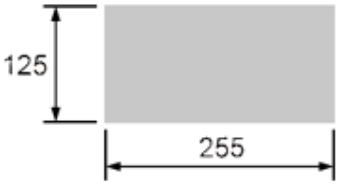

channel square: type CS1

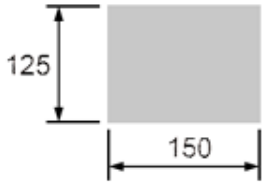

channel square: type CS2

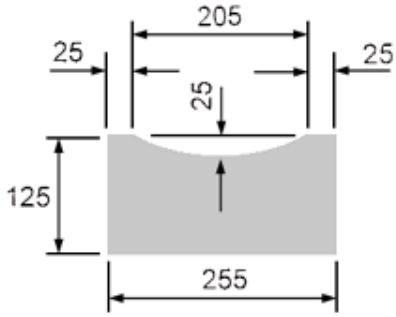

channel dished: type CD

edging cross-sections

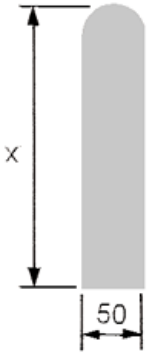

Note: x = 150.200 or 250mm
round top edging: Type ER

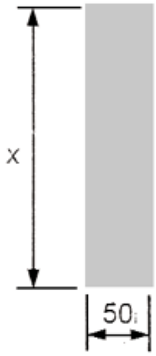

flat top edging: Type EF

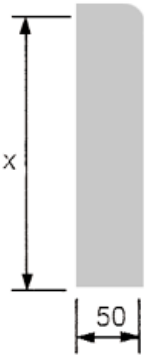

bullnosed edging: Type EBN

angle kerb dimensions

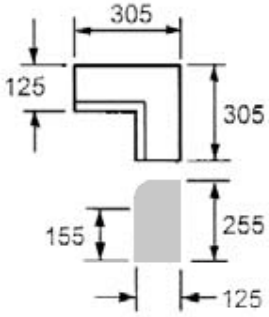

internal angle kerb: type 1A

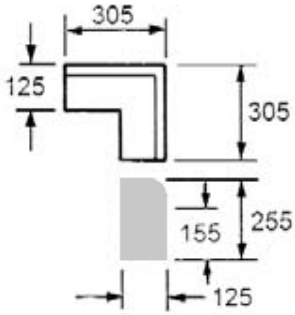

external angle kerb: type XA

angle kerbs in the above sizes may also have profiles to match bullnose type kerb BN or 45° splayed type SP

Downloaded from **http://www.paving.org.uk**

quadrant kerb dimensions

quadrants in these sizes may have the following profile:

(1) bullnosed type QBN, to match corresponding kerb type BN, or

(2) half battered type QHB to match corresponding kerb types HB2, HB3, or

(3) 45° splayed type QSP to match corresponding kerb type S

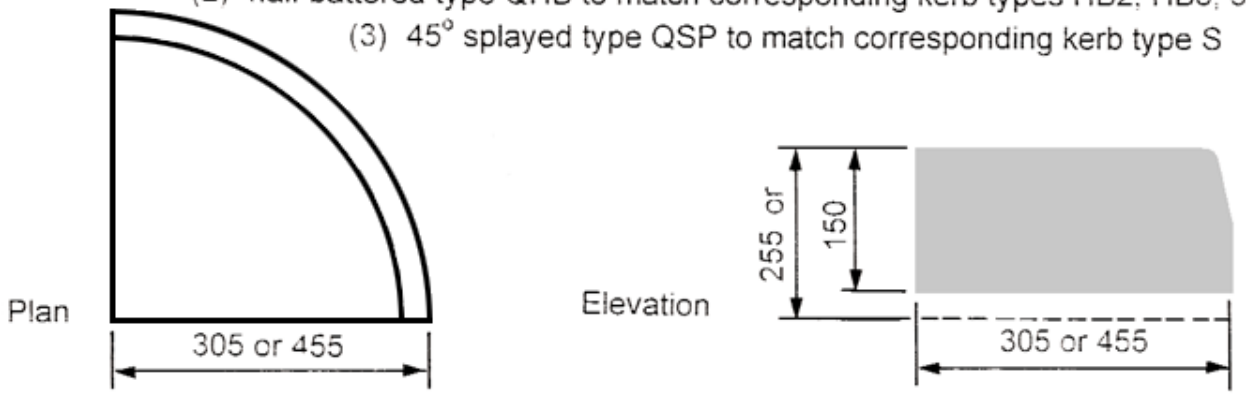

quadrant sizes 305 x 150 or 305 x 225 or 455 x150 or 455 x225

Tolerances

Permissible deviations - the value for possible deviation from manufacturer's declared values are as follows.

Length
± 1 % to the nearest mm, with a minimum of 4 mm and not exceeding 10 mm.

Other dimensions
Other faces: ± 3 % to the nearest mm, with a minimum of 3 mm not exceeding 5 mm.
Other parts: ± 5 % to nearest mm, with a minimum of 3 mm not exceeding 10 mm

Flatness and straightness

Length of gauge mm	Permissible deviation mm
300	± 1.5
400	± 2.0
500	± 2.5
800	± 4.0

The difference between any two measurements of a single kerb shall be ≤ 5 mm

Downloaded from **http://www.paving.org.uk**

Performance

The new European Standard BS EN 1340: 2003, *Concrete Kerb Units - Requirements and Test Methods* has introduced a different approach to the old British Standard that will give specifiers and suppliers more confidence in the use of concrete kerb units. Whereas the BS EN stipulates that the manufactured concrete must conform to a wider range of performance characteristics, determined on actual manufactured concrete kerb units. Additionally, instead of having "one size fits all", all the performance characteristics are classified into classes, which the manufacturer must declare, so that the end user or supplier has the relevant information needed to make informed selections.

Before any product is launched it is subjected to the rigours of 'Initial Type Testing' which demonstrates conformity to the BS EN for a product family. A family of product types is best described as kerb units manufactured to give a similar surface using the same equipment, process and raw materials, e.g. a kerb unit manufactured with a natural river gravel will belong to the same surface family (same performance characteristics) as a kerb unit manufactured with crushed granite/limestone. Each manufacturer will declare their definitions of product families when asked.

The continuing conformance of the concrete kerbs to the BS EN is supported by 'Routine Type Testing' and additional measures established under 'Factory Production Control'. The BS EN describes how the performance characteristics are to be assessed with detailed test methods and procedures, as described below. These methods are to be used in all cases of dispute resolution. Other methods can be used routinely to check compliance with the BS EN provided correlation is established with the standard method.

Strength - is a measure of the ability of the concrete kerb unit to withstand load. It is determined under laboratory conditions using bending strength. A load is uniformly applied through a 40±1 mm swivel pad to the centre of gravity of the kerb unit which is supported by two parallel and rigid bearers rounded to a radius of 20 ± 1 mm until failure is reached. For each kerb the individual strength in MPa is determined using the second moment of area. For ease of calculation, the second moment of area and distance from the centroid to the extreme tensile fibre are incorporated for the profiles specified within the standard. For other profiles please refer to individual manufacturers who will supply the relevant information. The bending strength in MPa is recorded to check compliance with the BS EN. The number of kerbs per sample will vary depending on previous production performance assessed statistically by attributes or variables.

Downloaded from **http://www.paving.org.uk**

The characteristic bending strength shall not be less than the value corresponding to the class in the table that follows. None of the individual results shall be less than the corresponding minimum bending strength in the table. When kerbs, due to their geometry, cannot be tested according to this standard they shall be considered to be in the same class as tested kerbs provided they have at least the same concrete strength.

Bending strength classes

Class	Marking	Characteristic bending strength (MPa)	Minimum bending strength (MPa)
1	S	3.5	2.8
2	T	5.0	4.0
3	U	6.0	4.8

Weathering resistance - is a measure of the ability of the concrete kerb to withstand weathering where specific conditions exist such as frequent contact of the surfaces with de-icing salt under frost conditions. It can be assessed under laboratory conditions by measuring the amount of spalled material from a surface under the cycle of freezing/thawing action using a de-icing salt solution. Or, if no de-icing salt is used, then the measurement of the porosity by measuring the water absorption of the kerb should be used.

Abrasion Resistance - is a measure of the ability of the concrete kerb to withstand erosion caused by trafficking in service. It is assessed under laboratory conditions by abrading the surface of the kerb with a flow of a hard abrasive material while applying a known force. The resulting loss of material from the kerb surface is measured by determining the abraded width.

Slip/Skid Resistance - is a measure of the ability of the concrete kerb laid in service to withstand slipping for pedestrians and skidding for vehicles. The unpolished slip resistance value is determined using a "standard rubber" material attached to a Pendulum Friction Tester and tested under wet conditions. To determine the polished paver value (PPV) for all paving units BS 7932: 1998 should be used. This standard has formed the basis document for the European Test Method DD ENV 12633:2003. This test method measures the slip resistance of the kerb after it has been synthetically trafficked (or polished) under laboratory conditions to replicate the performance of kerbs during their life under traffic conditions. For more details please contact Interpave.

Downloaded from **http://www.paving.org.uk**

2 HANDLING

This section provides guidance on safe handling of kerbs and flags, and illustrates examples of available equipment. The following guidelines comply with HSE Construction Information *Sheet No 57, Handling Kerbs: Reducing the risk of musculoskeletal disorders (MSDs)*.

Concrete kerbs have been in use for around 70 years and concrete flag paving for even longer. Regulations have been in place for some time to protect workers from risks associated with musculoskeletal disorders and work related upper limb disorders resulting from manual installation of these products. They include the Health and Safety at Work Act, etc., 1974, Manual Handling Operations Regulations 1992 (as amended 2004) and 2007 CDM Regulations. There has been continuing growth in the use of mechanical lifting devices in the UK over recent years.

Some contractors and designers may not be aware of their responsibilities and how to minimize risk. In addition to health and safety considerations, mechanical installation regimes offer greater efficiency than manual handling, saving time and money.

These new guidelines are intended to help with the reduction of risk resulting from installation of highway kerbs and paving flags, and relate to currently available equipment. They do not replace the contractor's obligations to carry out risk assessments in accordance with the Construction (Design and Management) Regulations 2007 and work should be carried out in accordance with all relevant, current legislation.

Downloaded from http://www.paving.org.uk

Health and Safety Considerations:

Precast Concrete Kerbs

Concrete kerbs are generally supplied horizontally laid on pallets.

They can be divided into three categories: BS EN 1340 standard kerbs, BS EN 1340 accessories (e.g. quadrants, angles and radii) and non-BS products (e.g. containment and combined drainage kerbs). BS standard kerbs are 450 - 915mm long. The following weights are for 915mm length straight standard kerbs:

Profile Designation	Weight kg
Half battered HB1	97
Half battered HB2	69
Half battered HB3	42
Splayed SP	64
Bullnosed BN (150x305mm)	100
Bullnosed BN (125x255mm)	70

The weights of other specific products should be provided by the manufacturer. For example, traffic containment kerbs and combined drainage kerbs units can weigh in excess of 250 kg.

Precast Concrete Paving Flags

Each Interpave member has its own method of packaging but it is common for paving flags to be stacked vertically. The majority of packs are supplied palletised, although some are supplied in strapped packs.

Flags can be divided into three main categories: Standard, Small Element and Decorative. Traditionally the range of sizes of flags has remained consistent and the following units are recognised as the British Standard preferred sizes. As a guide to calculating individual weights of different size paving units a density of 2300kg/m^2 is used here.

Designation	Nominal Size mm	Thickness mm	Weight kg
A	600 x 450	50 or 63	32 or 39
B	600 x 600	50 or 63	43 or 52
C	600 x 750	50 or 63	53 or 65
D	600 x 90	50 or 63	64 or 78
E (small element)	450 x 450	50 or 70	23 or 33
F (small element)	400 x 400	50 or 65	19 or 23
G (small element)	300 x 300	50 or 60	11 or 13

Downloaded from http://www.paving.org.uk

Risk Assessment:

The Manual Handling Operations Regulations 1992 (as amended 2004) apply to all construction work. They set out a framework for employers to tackle the risks from manual handling. Under these regulations, if employers cannot avoid manual handling where there is a risk of injury, they must assess their manual handling operations and take steps to reduce the risk of injury to the lowest level reasonably practicable.
Kerb and flag laying by hand, particularly if repetitive, involves a serious risk of injury to those who are doing the work. Therefore employers need to take action to control this risk. When tackling the risk, the best solutions will be those which address all three main hazards: the weight of the kerb or flags; the repetitive nature of the operation; and posture during work. To help find the best solution, the following 'hierarchy of control measures' is suggested. You should try to adopt the solutions nearest the top of the hierarchy first, as these will give the best level of risk control.

Hierarchy Control Measures

- **Elimination** - Eliminate manual lifting of kerbs and flags at the design stage.
- **Total Mechanical** - ensure kerbs and flags are always handled and laid mechanically (e.g. using vacuum devices, mechanical grabs, etc). This is the preferred solution for new build and refurbishment work.
- **Partial Mechanical** - ensure that the maximum amount of the kerb or flag handling process is undertaken mechanically (e.g. using mechanical solutions to get the kerb or flag near its final position). Using smaller/lighter kerbs or flags, or substituting with block paving, or using handling aids will further reduce the risks from any residual manual handling.
- **Manual Handling** - in rare cases where it is not possible to use any of the above solutions, short stretches of kerb and flags may be laid manually. Where this is necessary, workers should be trained in good handling techniques. The use of lighter weight kerbs or devices that allow two people to share the lift will reduce the risk of injury.

Downloaded from **http://www.paving.org.uk**

Precautions:

All those involved in the specification, manufacture, supply and installation of kerbs and flags can help to reduce the risk from manual handling.

Designers, CDM Co-ordinators and Clients

The design and planning stage should consider:

- Solutions which eliminate repetitive manual handling.
- When kerbs or flags are used they are compatible with mechanical handling solutions.
- Identify the risks during the lifetime of the product including issues relating to maintenance and repair.
- Plan the work to allow the maximum number of kerbs or flags to be laid at one time to realise the economies of scale and promote the practicability of mechanical handling.

Contractors

Contractors need to plan the work to ensure risk is kept to an acceptable level. This may involve the following actions:

- Rethink the phasing of the installation to maximise the number of kerbs or flags being laid at one time.
- Lay direct from the pack or pallet rather than double handling.
- Use mechanical solutions for the handling of non-standard kerb details such as feature kerbs, transition kerbs, drop kerbs, quadrants (cheeses) and radius kerbs.
- Provide for the safe storage and secure transport of kerbs and flags.
- Ensure that workers are trained in the safe use of mechanical lifting equipment.
- Provide training in safe lifting techniques.

Downloaded from **http://www.paving.org.uk**

Mechanical Lifting Equipment Summary - Kerbs:

The following table illustrates examples of lifting equipment currently available for use with precast concrete kerbs.

	TYPE	ILLUSTRATION
MECHANICAL HANDLING EQUIPMENT	Mechanical grab attachment. Simple scissor attachment to an existing construction machine.	
	Hydraulic grab attachment. Hydraulically operated grab -attachment to an existing construction machine, hydraulics powered by host machine.	
	Self powered vacuum lifting attachment. Vacuum operated lifter attachment to an existing construction machine - self powered.	
	Vacuum fork lift attachment. Vacuum operated lifter attachment for a suitable fork lift or excavator fitted with forks - hydraulics powered by host machine - swinging beam arm - kerbs for use carried by the equipment	
	Vacuum lifter - trailer or truck mounted. Vacuum operated self powered lifter - trailer or lorry mounted - swinging boom arm - kerbs carried on board trailer or lorry	

Downloaded from http://www.paving.org.uk

Lifting Equipment:

Lifting equipment is generally based on mechanical or hydraulically operated clamps, or vacuum lifting systems. Suitability should be determined through a risk assessment of the operation. Equipment is available from Associate Members of Interpave: details available on www.paving.org.uk

Scissor Clamps

A simple clamping attachment fitted to existing site plant designed for lifting, or used manually by two operatives. Manual clamps are lifted and controlled by handles which must be located safely away from pivot points to avoid risks of trapped fingers. Scissor clamps are generally only used for handing kerbs, but clamps are available to handle and lay flags. The clamping action relies on the kerb mass to activate the gripping action. Gripping may be assisted by rubber blocks fixed to the clamps.

Hydraulic Clamp Systems

A simple clamping attachment to existing site plant designed for lifting. The clamping action relies on the kerb mass to activate the gripping action. Gripping is assisted by rubber blocks fixed to the clamps.

Vacuum Lifters

A simple suction lifting system suitable for a two-man lifting device (battery driven) or an attachment to existing site plant designed for lifting or mounted on a lorry or trailer. Vacuum lifters utilise a motorised pump to generate suction through a pad that attaches to the kerb or flag. It is essential to ensure that the suction pad type is suitable for the kerb or flag type to be lifted. Vacuum equipment may incorporate filters that require cleaning and replacement to ensure efficient running.

Maintenance and Safety

Although all of these options offer safe methods to move heavy product on site, the equipment must be well maintained. The failure of any equipment during lifting operations could cause serious injuries if the load is allowed to drop. Particular attention should be paid to the maintenance requirements of those areas that are most prone to wear and tear and which require repair or replacement from time to time. Care should also be taken with the handle grips which, when worn or loose, may allow operatives' hands to slip on the equipment.

Selecting Lifting Equipment

- Consider the various differences between equipment available in the context of the proposed work.
- Check for the appropriate manufacturer's certification / guarantees to ensure that the equipment has been designed for the intended use and determine the lowest safe working load of any component of the equipment.
- Ensure that the equipment is in good working order and not damaged.
- For vacuum lifting equipment, vacuum heads/ pads are available to suit different kerb

Downloaded from **http://www.paving.org.uk**

and flag sizes/weights and surface profiles. Ensure that the lifting vacuum heads/pads are suitable for and compatible with the kerbs or flags to be lifted.

- Ensure that the equipment is the most appropriate for the job before purchasing or hiring. If the equipment is used inappropriately or not in accordance with manufacturers' recommendations, accidents may occur.
- For manual lifting equipment, make sure that it will allow the worker(s) to lift and lower the load without undue bending or twisting and to hold the equipment comfortably without excessive wrist deviation.
- Equipment continues to be developed with increased adoption by the industry and discussions with the equipment manufacturers before purchase may enable modifications to be made to suit any specific requirements.

Practical Considerations

- Make sure that the work is appropriate for powered machines, e.g. that the machinery can manoeuvre around the site.
- Check with the kerb or flag manufacturer that products can be delivered to site packed and loaded in a way that is compatible with the operational characteristics of the equipment, i.e. with drainage channels or tactile/riven/textured paving the right way up.
- Operators of the equipment must complete training as laid down by the equipment supplier. Manual handling training is also required to deal with any unforeseen manual handling of products and pallets.
- When manually handling ensure personnel have received training on team lifting and manual handling, and carry out the work in such a way as to reduce manual handling risks to an absolute minimum.

Use and Maintenance of the Equipment

- The equipment must be used, maintained and tested strictly in accordance with the equipment manufacturer's and supplier's requirements.

Downloaded from **http://www.paving.org.uk**

Manual Lifting Equipment Summary - Kerbs:

The following table illustrates examples of lifting equipment currently available for use with precast concrete kerbs.

	TYPE	ILLUSTRATION
MECHANICAL HANDLING EQUIPMENT	One person manual lifting vacuum system. Battery driven vacuum lifter.	
	Two Person manual lifting clamp. Simple scissor action operated by two people - (Two clamps and persons required to lift kerb)	
	Two person manual lifting clamp. Simple scissor action operated by two persons.	
	Two person vacuum lifting system. Battery driven vacuum lifter - may be used as an attachment with existing construction plant	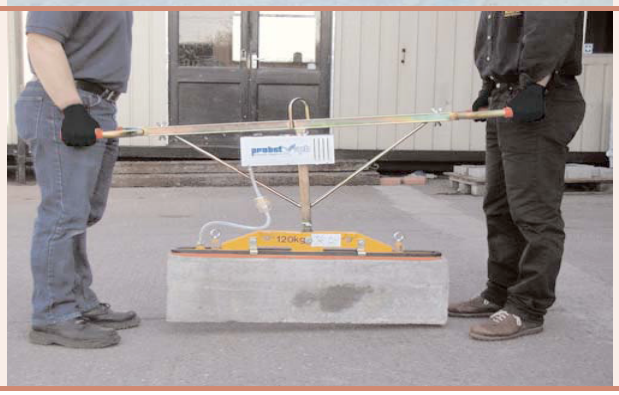

Downloaded from http://www.paving.org.uk

General Guidance:

It is important that work procedures are drawn up before commencement to identify any hazards. Failure to do this can result in lack of co-ordination of materials and multiple handling of product. Correct Personal Protective Clothing should be used.

Planning the work

- Work should be planned and coordinated to avoid unnecessary handling.
- For operations where it is proposed to carry products around site, forklift vehicles are used, kerbs and flags should be delivered on timber pallets. Ensure that pallets are robust as the failure of a pallet could allow kerbs or flags to fall.
- Strapping and wrapping of packs should only be removed just prior to use of the kerbs or flags.
- Care should be taken when cutting bands and/or removing wrapping to avoid kerbs or flags falling.
- Accurate placement of the laying course will minimise shovelling operations
- Accurate preparation of the concrete bed and any excavated trench will reduce the amount of adjustment to kerbs once laid.
- Consideration should be given to avoiding on-site cutting and, if it is necessary, to its safe execution. Comprehensive guidance is available for both kerbs and flags via **http://www.paving.org.uk**

Return to work

Employers should consider how to manage workers who have suffered manual handling injury, in particular their work. For most lower back injuries, staying mobile can assist recovery. With an employer's good management, including a 'back-to-work' plan, in most cases the affected person will be able to return to work. Good management would include reviewing the risk assessment and obtaining medical advice. Further information is available on the *HSE Back Pain and Sickness absence* web pages.

Downloaded from **http://www.paving.org.uk**

Further Information:

Publications

- Health and Safety at Work Act etc 1974
- Management of Health and Safety at Work Regulations 1999
- Manual Handling Operations Regulations 1992 (as amended 2004)
- Construction (Design and Management) Regulations 2007 (CDM)
- Lifting Operations and Lifting Equipment Regulations 1998
- Provision and Use of Work Equipment Regulations 1992
- HSE leaflet MISC 383, the Manual Handling Assessment Chart
- HSE booklet L23 - Manual Handling; The Manual Handling Operations Regulations 1992 (as amended)

Websites

- http://www.hse.gov.uk/msd/backpain/index.htm
- http://www.hse.gov.uk/sicknessabsence/index.htm

Downloaded from **http://www.paving.org.uk**

3 DETAILING AND INSTALLATION

This guidance is based upon BS 7533-6:1999 *Code of Practice for laying natural stone, precast concrete and clay kerb units*. It covers installation of concrete kerbs, channels, edgings, linear drainage, combined kerb and drainage units and other similar products.

Kerbs and edgings are mainly used as edge restraints to paved surfaces or where changes in the surface materials or levels occur. They retain any unbound construction material, e.g. laying course material, within the paved area and help support the applied loads by preventing horizontal displacement of the pavement construction. Channels may be used in these applications as well but can also be used to intercept and transport surface water.

In vehicular areas kerb, edging and channel units will inevitably be overrun or suffer side impact from vehicle tyres sometime in their service life. By selecting the appropriate units and ensuring correct installation they will give long and durable service.

Installation of concrete kerbs, edging and channel units has five main stages:

- Preparation of support layers
- Construction of unit foundation
- Laying to line and level
- Bedding of units
- Haunching of units

Th unit foundation itself must be supported , either on an extension to the underlying pavement sub-layers or, for thin pavements(e.g. edgings on pedestrian footways), directly on an adequate subgrade. The depth of the unit and that of the pavement construction will determine on which pavement layer the kerb foundation will sit.

Downloaded from **http://www.paving.org.uk**

A good concrete foundation (kerb race) to support the unit is essential and must be sufficient for the intended pedestrian or vehicular trafficking. It must be able to spread and transmit the applied vehicular wheel loads to the underlying support layer without overstressing the layer. The foundation must also be capable of resisting any shear forces induced by overrun.

Kerbs and edgings in particular are also intended to be a visual marker, either to highlight the edge of a pavement or to warn of a change in level. They must therefore be laid to the correct line and level as any discrepancy will stand out and detract from the appearance of the finished pavement. Channels, when used to convey water, must be accurately laid to the correct line and level. Any variation from line and level may interrupt the smooth water flow leading to localized ponding and possible deposition of water-borne silt.

Kerbs, edgings and channels require bedding to provide even support and prevent vehicular overrun from damaging the unit by inducing bending stresses. The units may be bedded directly on a freshly mixed concrete kerb race, on mortar on a hardened kerb race or bonded directly to the pavement surface with a modified strengthened mortar or suitable resin compound.

Units should be haunched with backing concrete to support them and prevent horizontal displacement, unless the adjacent paving can provide adequate support e.g. flush laid channel units in block paving.

The main elements of a typical kerb installation are shown below.

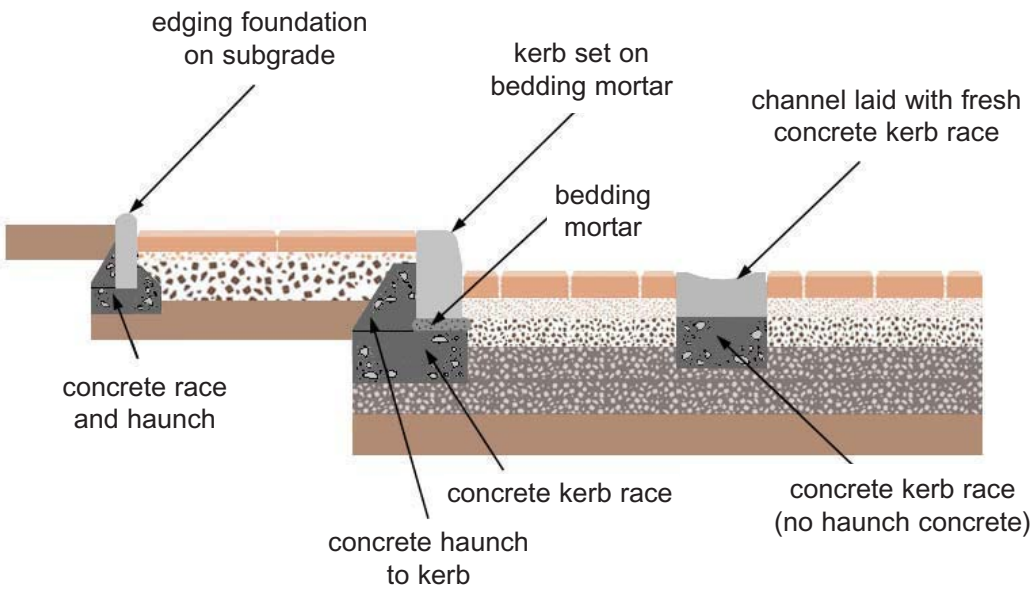

Downloaded from **http://www.paving.org.uk**

Laying

Products should be laid using one of the following alternative methods:

1. Units set on a race of freshly mixed concrete
2. Units bedded on a mortar bed on top of a hardened concrete race or onto a mortar bedding on a carriageway
3. Units bonded to the pavement surface.

Units should be haunched with ST1 concrete or a race of fresh concrete extended to the required height. Examples of typical kerb/edging installations for different applications follow.

Light vehicle and pedestrian traffic

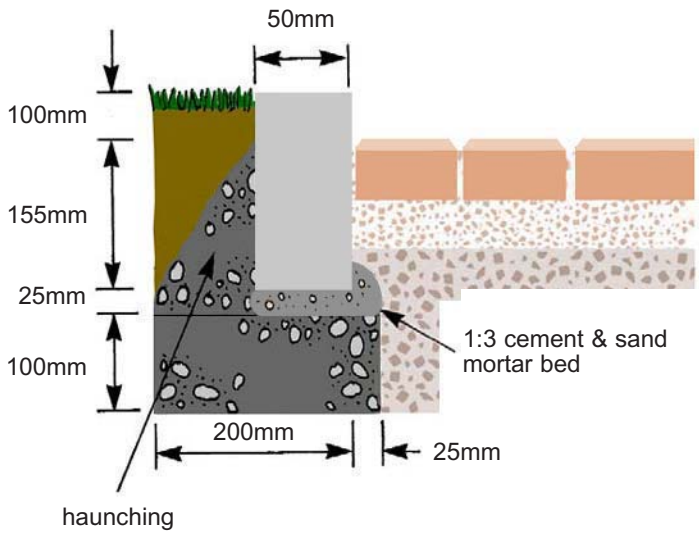

Estate roadways/car parking areas

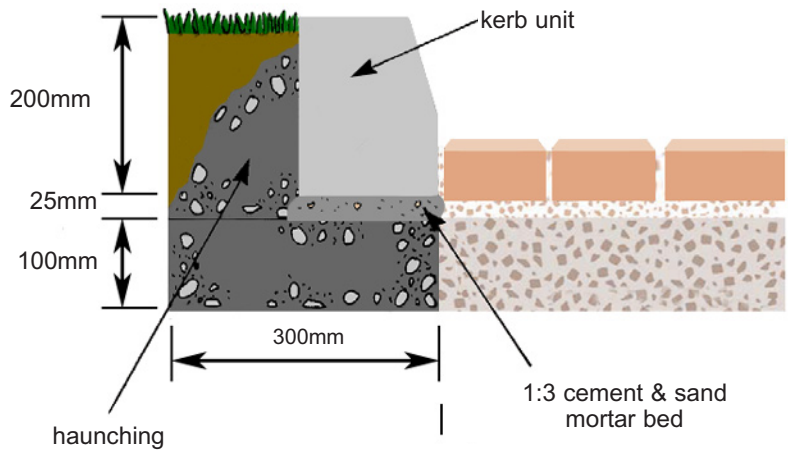

Downloaded from **http://www.paving.org.uk**

Heavy industrial traffic

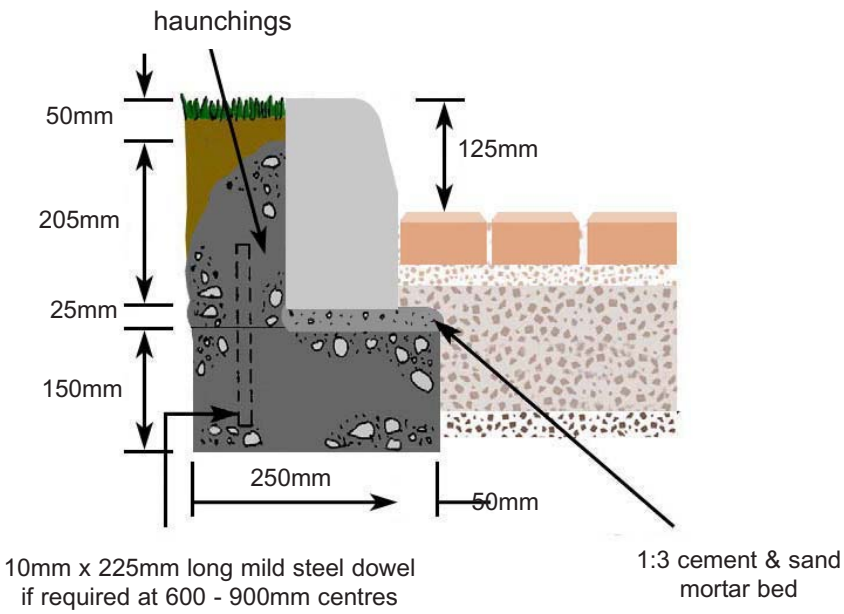

Laying on a fresh concrete race

A race of fresh ST1 concrete (to Table 13 of BS5328-1:1997) is placed along the intended line of where the units are to be placed. The concrete should extend to a width to fully support the units and backing concrete.

After placing the units, the race should have the following minimum thicknesses:

Edging units - 75 mm
Small kerb units - 100 mm
Kerbs and channels etc. - 150 mm

The units are laid on the fresh concrete and adjusted to line and level. The handling method by which the kerbs are placed depends on the type of kerb and the situation in which they are used (see separate Interpave guidance on www.paving.org.uk). The units are then haunched with ST1 concrete (as specified above). The concrete should be well compacted to fully support the units. In areas subject to heavy loading the race and haunch should either be monolithic or have dowel bars fixed into the base and extended into the haunching concrete. This will help prevent horizontal displacement.

Downloaded from **http://www.paving.org.uk**

Laying on a hardened race (edge beam or existing carriageway base)

A race of fresh ST1 concrete (to Table 13 of BS5328-1:1997) is placed along the intended line of where the units are to be placed. This is then allowed to fully harden. It should have a minimum thickness of 150 mm. The units should be bedded on freshly mixed mortar, 1:3 cement: sand (proportions by volume), with a 12-40 mm compacted thickness. The handling method by which the kerbs are placed depends on the type of kerb and the situation in which they are used (see Section 2). The units are then haunched with ST1 concrete (as specified above). The concrete should be well compacted to fully support the units. In areas subject heavy loading the race and haunch should either be monolithic or dowel bars fixed into the base and extended into the haunching concrete. This will help prevent horizontal displacement.

Laying on a pavement surface

The units may be laid directly onto a suitable pavement surface which should extend to a width to fully support the units and any required haunching. The units are bonded to the surface using a suitable synthetic resin compound or with a modified strengthened mortar (used strictly in accordance with the manufacturers' instructions).

Jointing

Concrete kerbs are generally laid with unfilled, close joints with a minimum joint width of 2 mm: they must not be butt-jointed. Mortar joints are not necessary but can be used for aesthetic reasons. The mortar should be freshly mixed, consisting of 1:4 cement: sand (by volume). Where mortar joints are used, they should be completely filled and fully compacted. Joint widths should be 5-7 mm.

Where units are laid over or adjacent to a jointed concrete pavement, suitable joints should extend through the line of the units at the joint and continue through the kerb race and haunching concrete. When mortar joints are used, movement joints should be provided. These movement joints should be formed of 10 mm thick, easily-compressible material, extend through the kerb race and haunching concrete, and should be at 15 m centres. Mortar should be used as soon as possible and any material that has begun to set or has been mixed for more than two hours discarded.

Downloaded from **http://www.paving.org.uk**

Setting-out and Alignment

Units are set-out to line and level using a string line between pegs or steel pins. The line and level of the laid units should then be checked and any necessary adjustments made. Allowances should be made on curves, as the string line will be made up of a series of straight lines. Final alignments are checked to ensure that the units follow a smooth curve both horizontally and vertically. When using kerbs to EN 1340: 2003, radius kerbs should be used for radii of 15m or less.

Units should be laid to within 10 mm of their design alignment and the difference between adjacent units should not exceed 3 mm. Kerbs should normally be laid so that the water check is 25 mm above the surface of the road. At vehicle crossing points kerbs should be 25 mm above final road surface unless otherwise stated.

At pedestrian crossing points dropped kerbs should be laid 6 mm above the final road surface on the lower side of the road and level with the surface on the higher side to aid drainage. For ease of wheelchair use, the upstand should be between 0 and 6 mm. Joints on the dropper units may need adjustment to achieve this. This application may require a drainage outlet for removal of surface water at this point.

Cutting units

The long kerbs should not be cut to less than 300 mm in length, with smaller units not being cut to less than $^{1}/_{3}$ of their original length (and a minimum of 50 mm).

Downloaded from **http://www.paving.org.uk**

4 REINSTATEMENT

Units can be difficult to remove individually without damaging adjacent units. Therefore, one unit and the haunching concrete should be broken out first using mechanical means. Any adjacent units can then usually be lifted using a pick after removal of the haunching concrete. Where units requiring relaying have mortar filled joints, the mortar is first carefully removed using a hammer and chisel. The units can then be removed, cleaned with a wire brush and set aside for reuse if appropriate.

If the units are to be taken up and relaid for the kerb line to be lifted to facilitate resurfacing of the adjacent carriageway then the units may be rebedded on mortar (where the new mortar will not be thicker than 40 mm). If it is necessary to raise the kerb line by more than 40 mm, normal mortar will have insufficient compressive and/or shear strength at this thickness. The additional depth should be made up by using a suitable modified mortar or ST1 concrete complying with Table 13 of BS 5328:Part 1:1997.

The method of preparation for reinstatement of units depends on how the units requiring remedial work are bedded, as follows.

Units bedded and laid on a fresh concrete race

After the units and the haunch concrete have been removed, either the level of the remaining kerb race can be reduced by approximately 30mm by mechanical means to allow a new mortar bed or the kerb race must be excavated and replaced. Replacement units or the cleaned original units can then be re-laid on a fresh concrete race or bedded on mortar on a new hardened concrete race with a new haunch.

Units bedded and laid on a concrete edge beam

After removal of the units, the haunch concrete and the bedding mortar replacement units or the cleaned original units can then be re-bedded on fresh mortar with a new haunch.

Units bedded and laid on a pavement surface

Units bonded directly onto the pavement surface can rarely be removed without being damaged. Therefore after removal of the units, any haunch concrete and the bonding material, replacement units are re-bedded on fresh, suitably modified, strengthened mortar or a synthetic resin compound, used in accordance with the manufacturer's instructions, with new haunch concrete if required.

Downloaded from **http://www.paving.org.uk**

Formpave

Marshalls

www.paving.org.uk

The Old Rectory, Main Street, Glenfield, Leicester LE3 8DG United Kingdom
e: info@paving.org.uk t: 0116 232 5170 f: 0116 232 5197

INTERPAVE IS A PRODUCT ASSOCIATION OF THE BRITISH PRECAST CONCRETE FEDERATION LTD

t: 0116 232 5170 f: 0116 232 5197
e: info@britishprecast.org
www.britishprecast.org

t: 0116 232 5191
f: 0116 232 5197
e: info@interlay.org.uk
www.interlay.org.uk

© BPCF Ltd 2005